1973 Volvo 1800ES Wiring Diagram - (Chassis # 3070 to 8078) Model Y

Wiring Diagram Version: V3.6 Date: August 2025

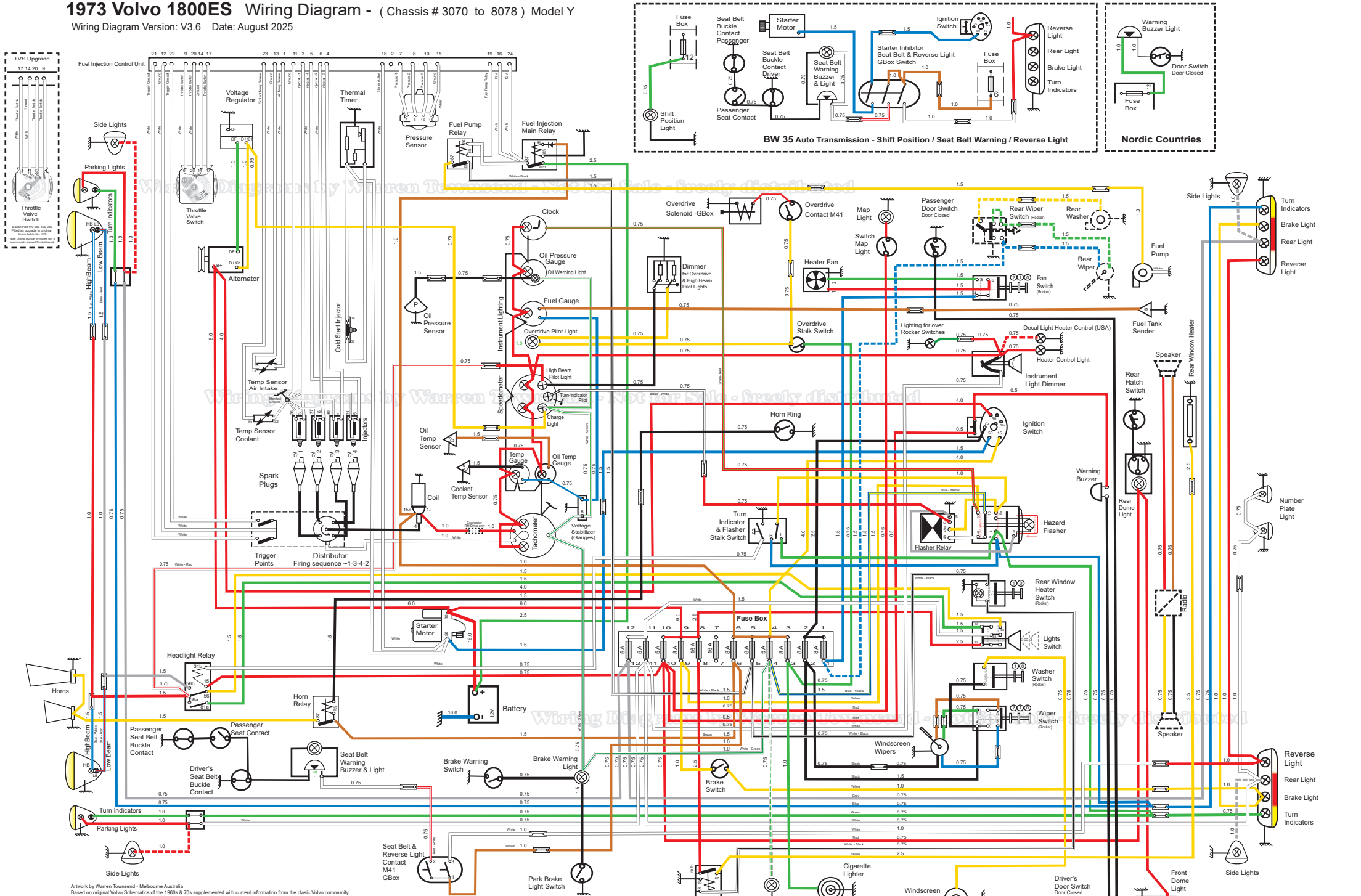

Artwork by Warren Townsend - Melbourne Australia
Based on original Volvo Schematics of the 1960s & 70s supplemented with current information from the clasic Volvo community.
I have attempted to make these Wiring Diagrams as accurate as possible, however no responsibility is accepted for any consequential errors from their use.
Diagrams will be updated as extra information comes to hand, please check your distribution source for the most recent versions.
I have used Dashed Lines to indicate Optional, or Market Specific Components.
*** In some instances Volvo made mid run production changes, please also reference prevoius, or subsequent year's schematics. ***
Wire Sizes are shown as "mm squared", e.g. 1.0 mm2, or 1.5 mm

Wiring Diagrams by Warren Townsend - Not for Sale - freely distributed